J. Schmalz GmbH
Johannes-Schmalz-Str. 1
D - 72293 Glatten
Tel +49 +7443 / 2403 - 0
Fax +49 +7443 / 2403 - 259
http://www.schmalz.com
e-mail: schmalz@schmalz.de

# Ersatzteilliste
# Spare parts list
# Liste de pièces de rechange

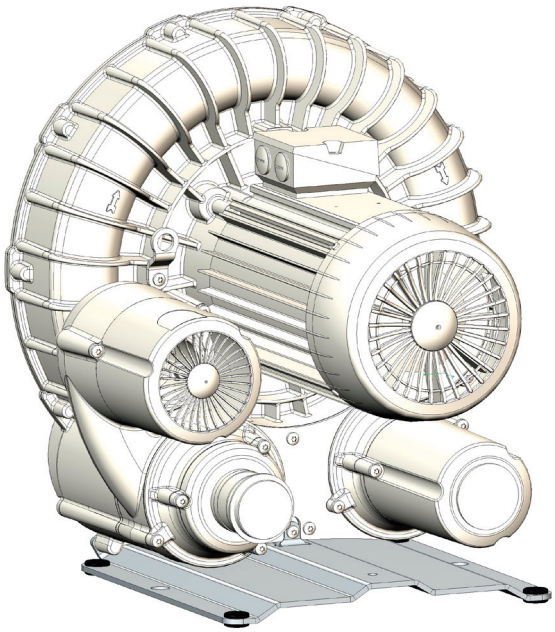

J. Schmalz GmbH
Johannes-Schmalz-Str. 1
D - 72293 Glatten
Tel +49 +7443 / 2403 - 0
Fax +49 +7443 / 2403 - 259
http://www.schmalz.com
e-mail: schmalz@schmalz.de

## 2 Ersatzteile / Spare parts / Pièces de rechange

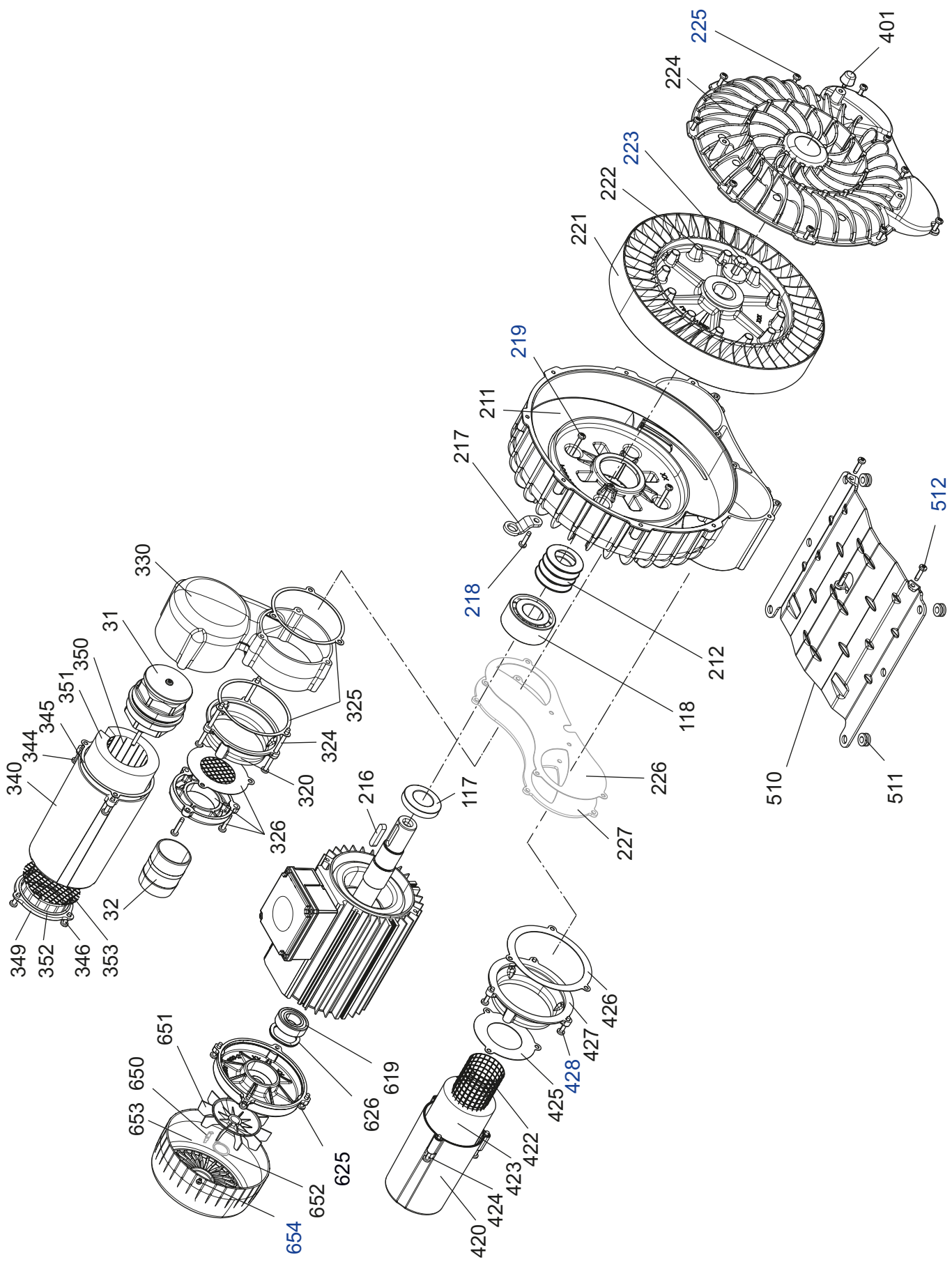

J. Schmalz GmbH
Johannes-Schmalz-Str. 1
D - 72293 Glatten
Tel +49 +7443 / 2403 - 0
Fax +49 +7443 / 2403 - 259
http://www.schmalz.com
e-mail: schmalz@schmalz.de


| Pos | Beschreibung | Description | Designation |
|---|---|---|---|
| 1 | MOTOR (EU/JAP/US) | MOTOR (EU/JAP/US) | MOTEUR (EU/JAP/US) |
| 31 | VENTILEINSATZ | VALVE INSERT | INSERT DE SOUPAPE |
| 32 | SCHLAUCHSTUTZEN | HOSE CONNECTOR | CONNEXION TUYAU |
| 117 | DISTANZBUCHSE | SPACER SLEEVE | DOUILLE D'ÉCARTEMENT |
| 118 | WÄLZLAGER | BALL BEARING | ROULEMENT A BILLES |
| 211 | GEHÄUSE | PUMP BODY | CORP DE POMPE |
| 212 | DISTANZSCHEIBENSATZ | SET OF SPACERS | ENSEMBLE D'ESPACEURS |
| 216 | PASSFEDER | KEY | CLAVETTE |
| 217 | TRANSPORTVORRICHTUNG | TRANSPORT DEVICE | DISPOSITIF DE TRANSPORT |
| 218 | SCHRAUBE | SCREW | VIS |
| 219 | SCHRAUBE | SCREW | VIS |
| 221 | LAUFRAD | IMPELLER | ROUE |
| 222 | UNTERLEGSCHEIBE | WASHER | RONDELLE |
| 223 | WELLENENDSCHRAUBE | SCREW | VIS L |
| 224 | GEHÄUSEDECKEL | HOUSING LID | COUVERCLE |
| 225 | SCHRAUBE | SCREW | VIS |
| 226 | DICHTUNG | GASKET | JOINT |
| 227 | ZWISCHENFLANSCH | INTERMEDIATE FLANGE | BRIDE INTERMÉDIAIRE |
| 320 | ZWISCHENFLANSCH | INTERMEDIATE FLANGE | BRIDE INTERMÉDIAIRE |
| 324 | SCHRAUBE | SCREW | VIS |
| 325 | DICHTUNG | GASKET | JOINT |
| 326 | ANSCHLUSSFLANSCH | FLANGE | BRIDE |
| 330 | ANSCHLUSSSTÜCK | FITTING | RACCORD |
| 340 | SCHALLDAEMPFERGEHÄUSE | SILENCER HOUSING | CORPS DE LA SILENCIEUX |
| 344 | SCHRAUBE | SCREW | VIS |
| 345 | DICHTUNG | GASKET | JOINT |
| 346 | SCHRAUBE | SCREW | VIS |
| 349 | GEWINDEFLANSCH | SCREWED FLANGE | BRIDE FILETÉE |
| 350 | SIEBROHR | STRAINER TUBE | GRILLE POUR SILENCIEUX |
| 351 | DÄMPFERMATTE | SILENCER SPONGE | MOUSSE POUR SILENCIEUX |
| 352 | O-RING | O-RING SEAL | JOINT TORIQUE |
| 353 | SIEBSCHEIBE | SIEVE DISC | DISQUE DE TAMIS |
| 401 | GUMMIPUFFER | RUBBER BUFFER | AMORTISSEUR EN CAOUTCHOUC |
| 420 | SCHALLDAEMPFERGEHÄUSE | SILENCER HOUSING | CORPS DE LA SILENCIEUX |
| 422 | SIEBROHR | STRAINER TUBE | GRILLE POUR SILENCIEUX |
| 423 | DÄMPFERMATTE | SILENCER SPONGE | MOUSSE POUR SILENCIEUX |
| 424 | SCHRAUBE | SCREW | VIS |
| 425 | DICHTUNG | GASKET | JOINT |
| 426 | DICHTUNG | GASKET | JOINT |
| 427 | ZWISCHENFLANSCH | INTERMEDIATE FLANGE | BRIDE INTERMÉDIAIRE |
| 428 | SCHRAUBE | SCREW | VIS |
| 510 | FUSS | FOOT | PIED |
| 511 | GUMMIFORMTEIL | RUBBER BUSHING | PROTECTION EN CAOUTCH. |
| 512 | SCHRAUBE | SCREW | VIS |
| 619 | WÄLZLAGER | BALL BEARING | ROULEMENT A BILLES |
| 625 | SCHRAUBE | SCREW | VIS |
| 626 | WELLENFEDER | SHAFT SPRING | ANNEAU RESSORT |
| 650 | SICHERUNGSBLECH | LOCKING PLATE | PLAQUE DE SUJÉTION |
| 651 | MOTOR-VENTILATOR | MOTOR FAN | VENTILATEUR DU MOTEUR |
| 652 | SEEGERRING | SEEGER CIRCLIP | FREIN D'AXES SEEGER |
| 653 | HAUBE | COVER | CAPOT |
| 654 | SCHRAUBE | SCREW | VIS |
| **K1** | **SCHRAUBENSATZ** | **SCREW KIT** | **KIT DE VISSERIE** |

J. Schmalz GmbH
Johannes-Schmalz-Str. 1
D - 72293 Glatten
Tel +49 +7443 / 2403 - 0
Fax +49 +7443 / 2403 - 259
http://www.schmalz.com
e-mail: schmalz@schmalz.de


| Pos | SB 195-400-3,00 | SB 235-400-3,60 | SB 260-410-4,00 | SB 305-400-4,80 |
|---|---|---|---|---|
| 1 | 42489201605000GV (EU) | 42589207605000GV (US) | 42689201605000GV (EU) | 42789207605000GV (US) |
| 1 | 42489285605000GV (JAP) | | 42689285605000GV (JAP) | |
| 31 | 73370199609 | 73370199609 | 73370199609 | 73370199609 |
| 32 | 93920006000 | 93920006000 | 93920006000 | 93920006000 |
| 117 | - | - | | |
| 118 | 90661940000 | 90661940000 | 90661940000 | 90661940000 |
| 211 | 00010560400 | 00010560400 | 00010160500 | 00010160500 |
| 212 | 51140060300 | 51140060300 | 51140060300 | 51140060300 |
| 216 | 94774200000 | 94774200000 | 94774200000 | 94774200000 |
| 217 | 02510060300 | 02510060300 | 02510060300 | 02510060300 |
| 218 | K1 | K1 | K1 | K1 |
| 219 | K1 | K1 | K1 | K1 |
| 221 | 00060160400 | 00060160400 | 00060060500 | 00060060500 |
| 222 | 96061200000 | 96061200000 | 96061200000 | 96061200000 |
| 223 | 90180500000 | 90180500000 | 90180500000 | 90180500000 |
| 224 | 00020460400 | 00020460400 | 00020060500 | 00020060500 |
| 225 | 94650800000 | 94650800000 | 94650800000 | 94650800000 |
| 226 | 90750060400 | 90750060400 | 90750060500 | 90750060500 |
| 227 | 00360060400 | 00360060400 | 00360060500 | 00360060500 |
| 320 | 00360560400 | 00360560400 | 00360560400 | 00360560400 |
| 324 | 94651100000 | 94651100000 | 94651100000 | 94651100000 |
| 325 | 90750260400 | 90750260400 | 90750260400 | 90750260400 |
| 326 | 57030760200 | 57030760200 | 57030760200 | 57030760200 |
| 330 | 01660060400 | 01660060400 | 01660060400 | 01660060400 |
| 340 | 00740060300 | 00740060300 | 00740060300 | 00740060300 |
| 344 | 94650900000 | 94650900000 | 94650900000 | 94650900000 |
| 345 | 90750660300 | 90750660300 | 90750660300 | 90750660300 |
| 346 | 94650800000 | 94650800000 | 94650800000 | 94650800000 |
| 349 | 00780060300 | 00780060300 | 00780060300 | 00780060300 |
| 350 | 90760230000 | 90760230000 | 90760230000 | 90760230000 |
| 351 | 90770740000 | 90770740000 | 90770740000 | 90770740000 |
| 352 | 91312220000 | 91312220000 | 91312220000 | 91312220000 |
| 353 | 00800048000 | 00800048000 | 00800048000 | 00800048000 |
| 401 | 74131500000 | 74131500000 | 74131500000 | 74131500000 |
| 420 | 00740160200 | 00740160200 | 00740160200 | 00740160200 |
| 422 | 90760080000 | 90760080000 | 90760080000 | 90760080000 |
| 423 | 90770650000 | 90770650000 | 90770650000 | 90770650000 |
| 424 | 94650500000 | 94650500000 | 94650500000 | 94650500000 |
| 425 | 90750160200 | 90750160200 | 90750160200 | 90750160200 |
| 426 | 90750260400 | 90750260400 | 90750260400 | 90750260400 |
| 427 | 00360560400 | 00360560400 | 00360560400 | 00360560400 |
| 428 | K1 | K1 | K1 | K1 |
| 510 | 01510060400 | 01510060400 | 01510060400 | 01510060400 |
| 511 | 95193200000 | 95193200000 | 95193200000 | 95193200000 |
| 512 | K1 | K1 | K1 | K1 |
| 619 | 90661000000 | 90661000000 | 90661000000 | 90661000000 |
| 625 | 94650900000 | 94650900000 | 94650900000 | 94650900000 |
| 626 | 91719100000 | 91719100000 | 91719100000 | 91719100000 |
| 650 | 06310060500 | 06310060500 | 06310060500 | 06310060500 |
| 651 | 00230160500 | 00230160500 | 00230160500 | 00230160500 |
| 652 | - | - | - | - |
| 653 | 96070160400 | 96070160400 | 96070160400 | 96070160400 |
| 654 | K1 | K1 | K1 | K1 |
| **K1** | **56690060500** | **56690060500** | **56690060500** | **56690060500** |

J. Schmalz GmbH
Johannes-Schmalz-Str. 1
D - 72293 Glatten
Tel +49 +7443 / 2403 - 0
Fax +49 +7443 / 2403 - 259
http://www.schmalz.com
e-mail: schmalz@schmalz.de


| Pos | SB 325-265-3,00 | SB 390-245-3,60 | SB 390-315-4,00 | SB 470-290-4,80 |
|---|---|---|---|---|
| 1 | 42489201603000GD (EU) | 42589207603000GD (US) | 42689201605000GV (EU) | 42789207605000GV (US) |
| 1 | 42489285603000GD (JAP) | | 42689285605000GV (JAP) | |
| 31 | 73370199609 | 73370199609 | 73370199609 | 73370199609 |
| 32 | 93920006000 | 93920006000 | 93920006000 | 93920006000 |
| 117 | 01390060300 | 01390060300 | 01390060300 | 01390060300 |
| 118 | 90661650000 | 90661650000 | 90661650000 | 90661650000 |
| 211 | 00010060300 | 00010060300 | 00010460400 | 00010460400 |
| 212 | 51140060300 | 51140060300 | 51140060300 | 51140060300 |
| 216 | 94774200000 | 94774200000 | 94774200000 | 94774200000 |
| 217 | 02510060300 | 02510060300 | 02510060300 | 02510060300 |
| 218 | K1 | K1 | K1 | K1 |
| 219 | K1 | K1 | K1 | K1 |
| 221 | 00060260300 | 00060260300 | 00060160400 | 00060160400 |
| 222 | 96061200000 | 96061200000 | 96061200000 | 96061200000 |
| 223 | K1 | K1 | K1 | K1 |
| 224 | 00020060300 | 00020060300 | 00020460400 | 00020460400 |
| 225 | 94650800000 | 94650800000 | 94650800000 | 94650800000 |
| 320 | 00360560300 | 00360560300 | 00740160200 | 00740160200 |
| 324 | 94651100000 | 94651100000 | 94650500000 | 94650500000 |
| 325 | 90750660300 | 90750660300 | 90750160200 | 90750160200 |
| 326 | 57030760200 | 57030760200 | 57030760200 | 57030760200 |
| 330 | 01660060300 | 01660060300 | 01660060400 | 01660060400 |
| 340 | 00740060300 | 00740060300 | 00740060300 | 00740060300 |
| 344 | 94650900000 | 94650900000 | 94650900000 | 94650900000 |
| 345 | 90750660300 | 90750660300 | 90750660300 | 90750660300 |
| 346 | 94650800000 | 94650800000 | 94650800000 | 94650800000 |
| 349 | 00780060300 | 00780060300 | 00780060300 | 00780060300 |
| 350 | 90760230000 | 90760230000 | 90760230000 | 90760230000 |
| 351 | 90770740000 | 90770740000 | 90770740000 | 90770740000 |
| 352 | 91312220000 | 91312220000 | 91312220000 | 91312220000 |
| 353 | 00800048000 | 00800048000 | 00800048000 | 00800048000 |
| 401 | 74131500000 | 74131500000 | 74131500000 | 74131500000 |
| 420 | 00740160200 | 00740160200 | 00740160200 | 00740160200 |
| 422 | 90760080000 | 90760080000 | 90760080000 | 90760080000 |
| 423 | 90770650000 | 90770650000 | 90770650000 | 90770650000 |
| 424 | 94650500000 | 94650500000 | 94650500000 | 94650500000 |
| 425 | 90750160200 | 90750160200 | 90750160200 | 90750160200 |
| 426 | 90750660300 | 90750660300 | 90750260400 | 90750260400 |
| 427 | 00360560300 | 00360560300 | 00360560400 | 00360560400 |
| 428 | K1 | K1 | K1 | K1 |
| 510 | 01510060300 | 01510060300 | 01510060400 | 01510060400 |
| 511 | 95193100000 | 95193100000 | 95193200000 | 95193200000 |
| 512 | K1 | K1 | K1 | K1 |
| 619 | 90661000000 | 90661000000 | 90661000000 | 90661000000 |
| 625 | 94650900000 | 94650900000 | 94650900000 | 94650900000 |
| 626 | 91719100000 | 91719100000 | 91719100000 | 91719100000 |
| 650 | - | - | 06310060500 | 06310060500 |
| 651 | 00230060300 | 00230060300 | 00230160500 | 00230160500 |
| 652 | 94810100000 | 94810100000 | - | - |
| 653 | 96070160300 | 96070160300 | 96070160400 | 96070160400 |
| 654 | K1 | K1 | K1 | K1 |
| **K1** | **56690060500** | **56690060500** | **56690060500** | **56690060500** |

J. Schmalz GmbH
Johannes-Schmalz-Str. 1
D - 72293 Glatten
Tel +49 +7443 / 2403 - 0
Fax +49 +7443 / 2403 - 259
http://www.schmalz.com
e-mail: schmalz@schmalz.de


| Pos | SB 510-200-4,00 | SB 610-175-4,80 | | |
|---|---|---|---|---|
| 1 | 42689201605000GV (EU) | 42789207605000GV (US) | | |
| 1 | 42689285605000GV (JAP) | | | |
| 31 | 73370199609 | 73370199609 | | |
| 32 | 93920146000 | 93920146000 | | |
| 117 | 01390060300 | 01390060300 | | |
| 118 | 90661650000 | 90661650000 | | |
| 211 | 00010060500 | 00010060500 | | |
| 212 | 51140060300 | 51140060300 | | |
| 216 | 94774200000 | 94774200000 | | |
| 217 | 02510060300 | 02510060300 | | |
| 218 | K1 | K1 | | |
| 219 | K1 | K1 | | |
| 221 | 00060060500 | 00060060500 | | |
| 222 | 96061200000 | 96061200000 | | |
| 223 | 90180500000 | 90180500000 | | |
| 224 | 00020060500 | 00020060500 | | |
| 225 | 94650800000 | 94650800000 | | |
| 320 | 00360560400 | 00360560400 | | |
| 324 | 94651100000 | 94651100000 | | |
| 325 | 90750260400 | 90750260400 | | |
| 326 | 57030760200 | 57030760200 | | |
| 330 | 01660060400 | 01660060400 | | |
| 340 | 00740060300 | 00740060300 | | |
| 344 | 94650900000 | 94650900000 | | |
| 345 | 90750660300 | 90750660300 | | |
| 346 | 94650800000 | 94650800000 | | |
| 349 | 00780060300 | 00780060300 | | |
| 350 | 90760230000 | 90760230000 | | |
| 351 | 90770740000 | 90770740000 | | |
| 352 | 91312220000 | 91312220000 | | |
| 353 | 00800048000 | 00800048000 | | |
| 401 | 74131500000 | 74131500000 | | |
| 420 | 00740160200 | 00740160200 | | |
| 422 | 90760080000 | 90760080000 | | |
| 423 | 90770650000 | 90770650000 | | |
| 424 | 94650500000 | 94650500000 | | |
| 425 | 90750160200 | 90750160200 | | |
| 426 | 90750260400 | 90750260400 | | |
| 427 | 00360560400 | 00360560400 | | |
| 428 | K1 | K1 | | |
| 510 | 01510060400 | 01510060400 | | |
| 511 | 95193200000 | 95193200000 | | |
| 512 | K1 | K1 | | |
| 619 | 90661000000 | 90661000000 | | |
| 625 | 94650900000 | 94650900000 | | |
| 626 | 91719100000 | 91719100000 | | |
| 650 | 06310060500 | 06310060500 | | |
| 651 | 00230160500 | 00230160500 | | |
| 653 | 96070160400 | 96070160400 | | |
| 654 | K1 | K1 | | |
| **K1** | **56690060500** | **56690060500** | | |